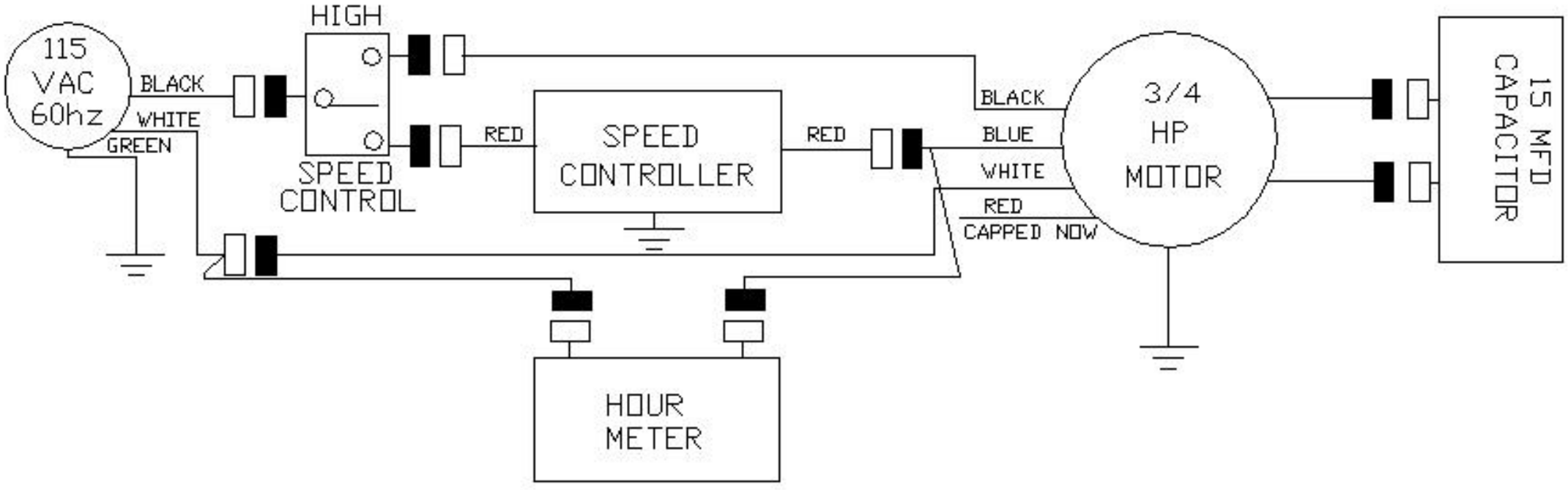


| | | | | |
|---|---|---|---|---|
| Omnitec Design<br>2125 196th St SW #115<br>Lynnwood, WA 98036 | OA1300V Wiring Diagram | Revision<br>A | Revision Notes | Date<br>11/01/06 |